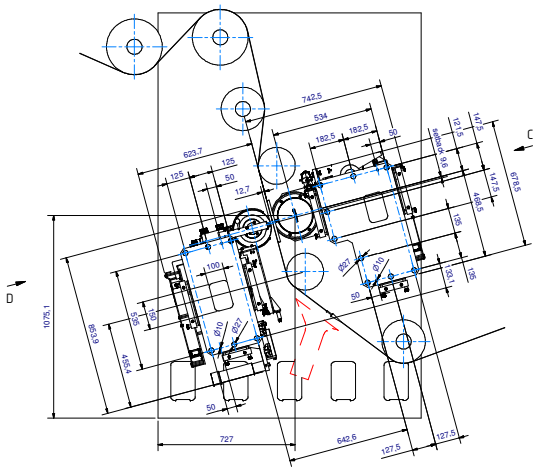

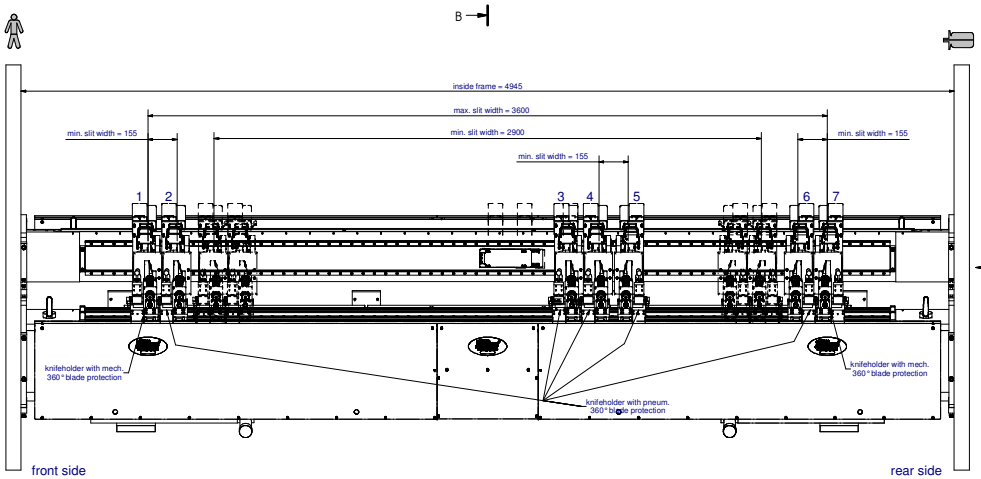

view " B-B "

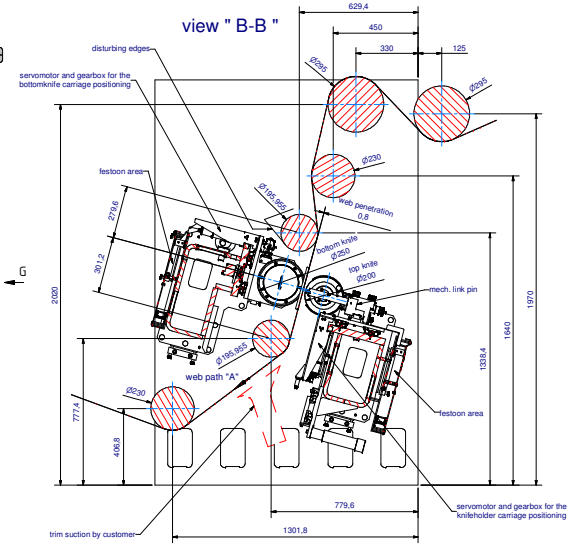

view " G "
bore pattern for adjustment blocks

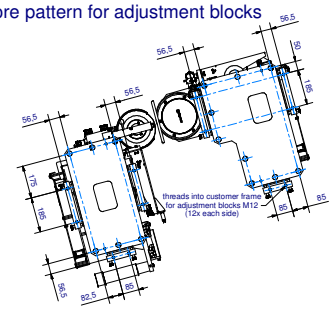

view " C "

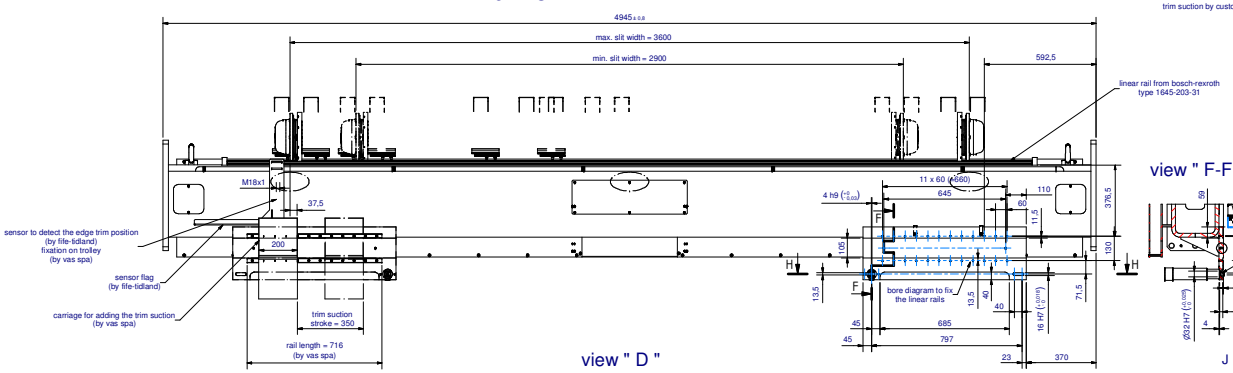

view " F-F "

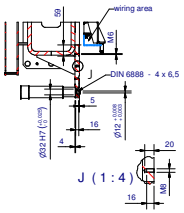

view " D "

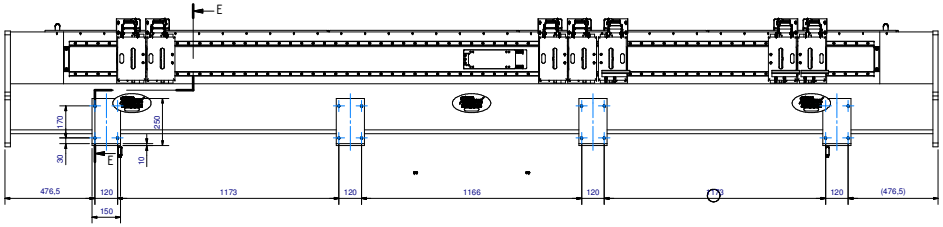

view " E-E "

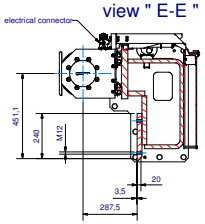

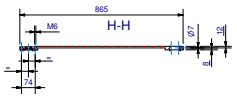

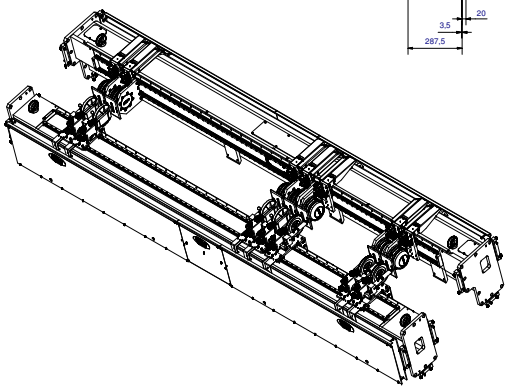

power supply by customer:
400V; 50 Hz

air supply by customer:
7 bars, 5µm filtered and over water seperator

reference signal by customer:
0 - 10V or 4 - 20 mA

?? m cable length between the junction box and the ac-drive cabinet

?? m cable length between the pneumatic cabinet and the ac-drive cabinet

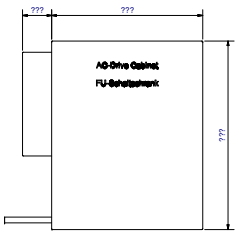

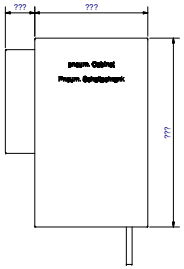

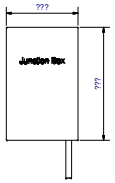

Application Information:

Techn. Data's:
max. web speed: 2200 m/min
min. web speed: 200 m/min
material: coated paper
basis weigth:20 - 90 g/m²
No. of slits: 7
max. overall slit width: 3560 mm
min. slit width: 155 mm
max. raw web width: 3600 mm
inside frame width: 4945 mm

colour to be painted: RAL1013 (oyster white, dull)

knifeholder: Serie "C" class 3
knife diameter: 200 mm
knife material: X 155CrVMo12 1 (1.2379)

anvil motor:
MK 137-2DK.07.N (M188445)
3 Phasen; 230 V D / 400 V Y; 50 Hz; 0.8 kW; 2650 1/min
4.3 A / 2.6 A; cos phi 0.75; IP54 F
anvil knife diameter: 250 mm
anvil knife material: X 155CrVMo12 1 (1.2379)

Air pressure:
min. 5.5 bar constant air supply for the carriage brakes,
6 bar adjustable air supply for the knifeholder over
air regulator with oil- and waterseperator and 5µm filter

?? m cable and tube length between the end of each beam to the pneumatic cabinet

?? m cable length between the end of the beam to the junction box

the ac-drive cabinet, the pneumatic cabinet and the junction box are locatet at the -- ??? -- of the machine.

the junction box and the pneumatic cabinet have to be located near to the slitting unit (MSP-E)

Attention!
The function of the slitting unit can only be guaranteed if it is mounted into a machine frame that is designed with low or even no vibration.

Zu Abweichung nach DIN ISO 2768 T1 -m- DIN ISO 2768 T2 -K- Oberflächen nach DIN ISO 1302	FIFE-TIDLAND GmbH	Benennung: MSP CIII - full automatic with servomotor and gear rack web in, mech. Link Pin Confirmation Drawing	
Werkstoff/Zeichnung:	Gewicht: 3570 kg	Maßstab: 1:10	Maßeinheit: mm	Erstellt: 28.08	Datum: Name: Nelle	Zeichnungsnummer: MSP-E	Schlüssel: M321855	Blattnummer: 710601	Index: 000
CAD-System: Inventor R10									
Schutzvermerk nach DIN 34	Protection mark according to DIN 34								